CODICE	MODEL	*	**	✧	☆	□	COD.CUSTOMER						
S02211	4120 GSS	110040214	200054800(2)	200092100(2)	200059215(2)	200070915(2)	5148511						

4120 GSS
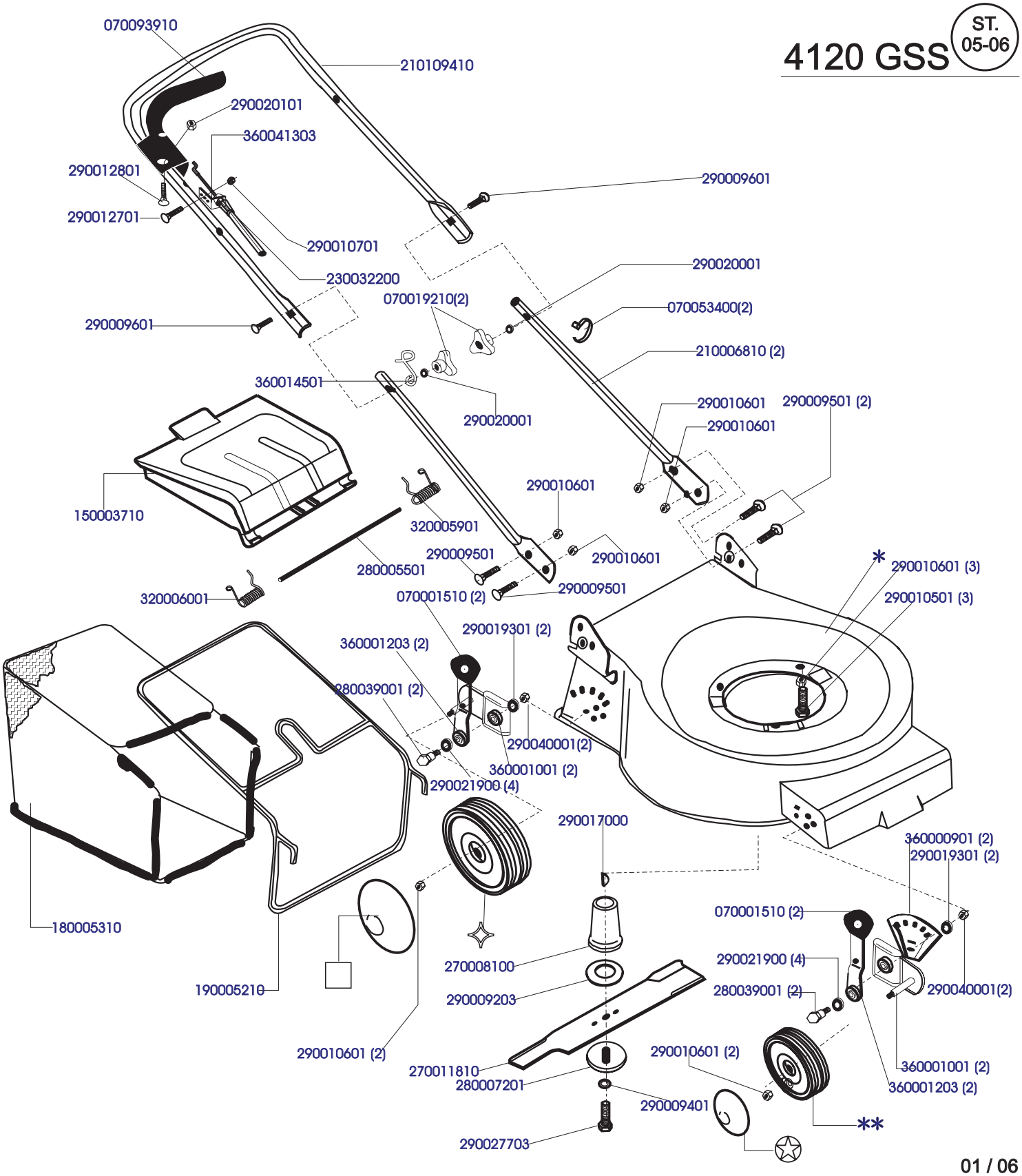
ST. 05-06